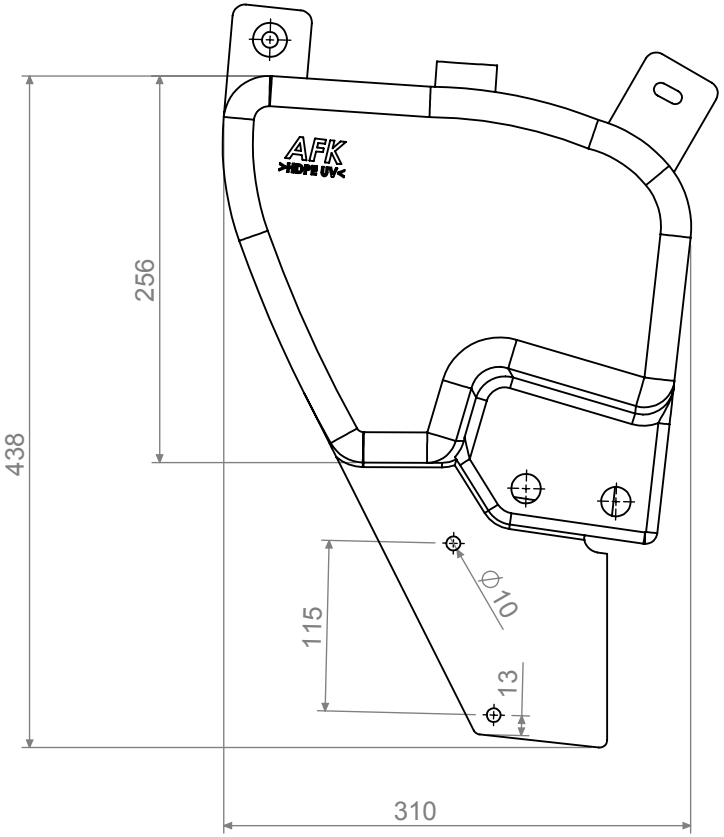

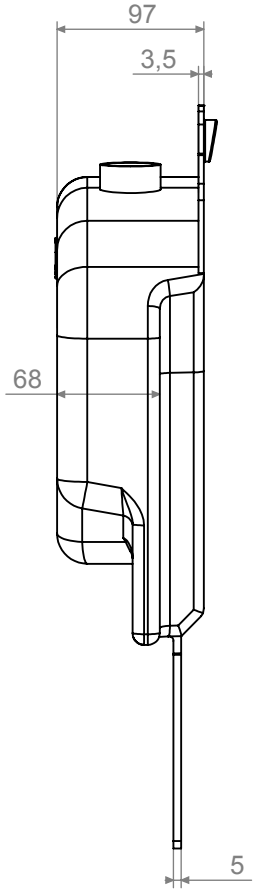

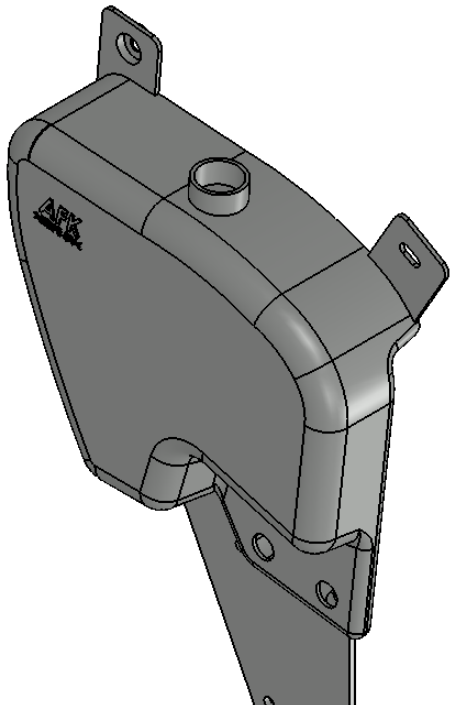

Revisions:

No	Part Definition	AFK S.C.	Material	Quantity

GENEL TOLERANS TABLOSU DIN 2768

TOLERANS SINIFI		0,5 3	3 6	6 30	30 120	120 400	400 1000	1000 2000	2000 4000
f	Çok Hassas	±0,05	±0,05	±0,1	±0,15	±0,2	±0,3	±0,5	-
m	Hassas	±0,1	±0,1	±0,2	±0,3	±0,5	±0,8	±1,2	±2
c	Kaba	±0,2	±0,3	±0,5	±0,8	±1,2	±2	±3	±4
v	Çok Kaba	-	±0,5	±1	±1,5	±2,5	±4	±6	±8

	Date	Name-Surname	Signature
Drawn by	04.08.2009	Arzu ÇAVDAR	
Approved by	04.08.2009	Afşin KANDEMİR	

Scale 1:5

Part definition

CAM YIKAMA DEPOSU

AFK Otomotiv
Elektromekanik,Plastik Imalat San.Tic.Ltd.Sti.

Drawing	115AC023 R0
Material	HDPE / Beyaz
Non -defined Tolerans	(c) Kaba